4	3	2	1
MACHINING FINISH IN MICRONS	0.1–0.025	0.8–0.2	6.3–1.6	25–12.5	50

Do not scale the drawing.Ask if in doubt.All dimensions are in mm.Remove sharp edges & burrs.Chamfer 1x45°

MINS 6S-SSLV

M-CCB NO.	
CHECKED.	
APPD.	

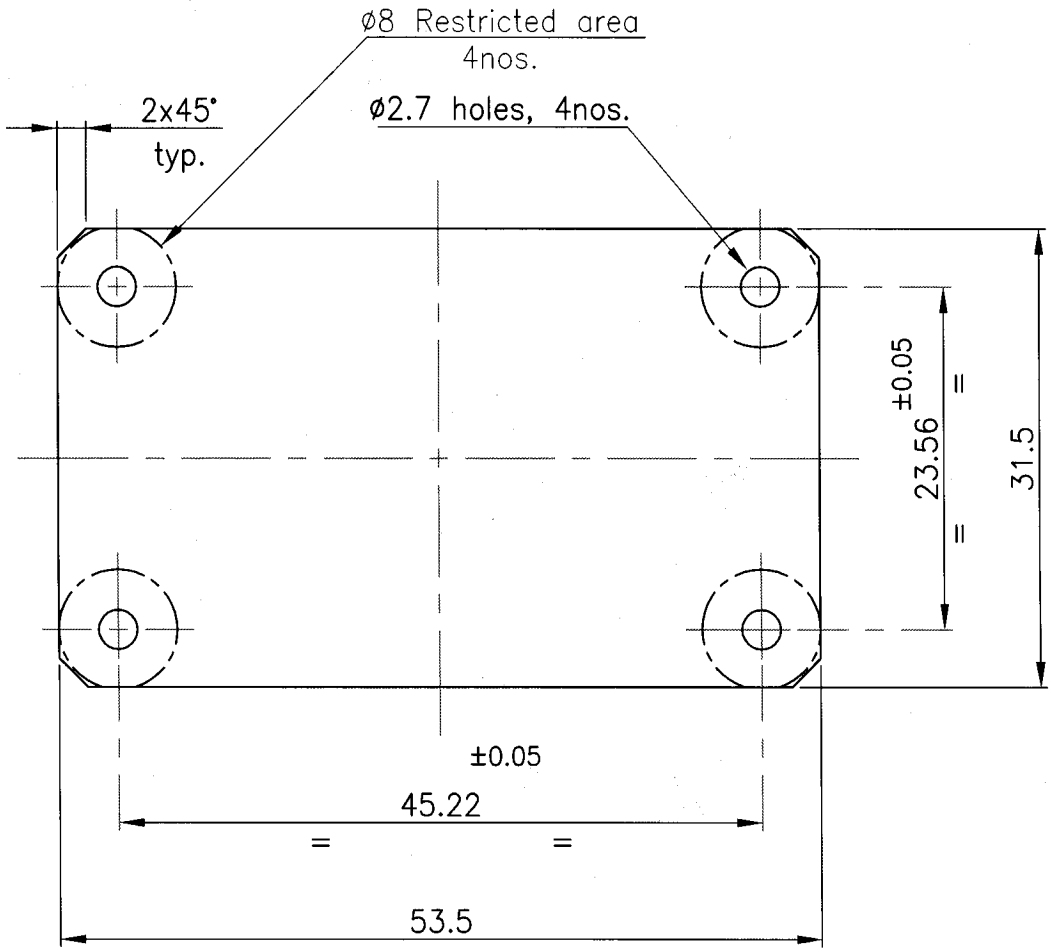

Note:-

1. The Restricted area at mounting locations consider the mechanical assembly/integration requirements only
2. Maximum component height on top layer of the PCB is 6.5
3. Maximum component height on bottom layer of the PCB is 2

MACHINING DEVIATION TO ISI: 2102 (MEDIUM GRADE) UNLESS SPECIFIED OTHERWISE															
LENGTH OR DIA	UPTO 6	6 30	30 120	120 315	315 1000	1000 2000	2000 4000	4000 ABOVE	LENGTH IN mm OF SHORTER SIDE OF ANGLE	UPTO 6	6 - 30	30 - 120	120 - 400
	± 0.1	± 0.2	±0.3	± 0.5	± 0.8	± 1.2	± 2.0	± 3.0		±1°	±30'	±20'	±10'

REVISIONS	SIGN.	DATE.
Component height on top layer changed from 5.5 to 6.5	Giri	16.3.22

REV.No.	ZONE
01	

DRN.	Giri	11.02	
DGN.		17/03/22	
CHD. DRG.			
CHD. DGN.		17/03/22	
CHD. QA			
APPD.			
2022	SIGN	DATE	

TITLE: NNP Power Card (NPC 100)
For Electronics Module assy.-MINS 6S

MATERIAL: FR4 1.6 thick

GOVERNMENT OF INDIA
INDIAN SPACE RESEARCH ORGANISATION
ISRO INERTIAL SYSTEMS UNIT
TRIVANDRUM

PROJECT	No.OFF	Mass.Kg.
SSLV	2	

MECHANICAL DESIGN
MDD
DIVISION

DRG.NO. 8211 16 02 02R1

REV. No.

SCALE:- 2:1 SHEET OF

File No. 8211160202

CCB No.